926M Ag Handler

Agricultural Arrangement

	926M Ag Handler	926M Ag Handler – High Lift
Engine Model*	Cat® C7.1	
Engine Power		
ISO 14396	125 kW (168 hp)	
ISO 14396 (metric)	170 hp	
Bucket Capacity	1.9-5.0 m^3	
Full Turn Tip Load	7453 kg	5405 kg
Operating Weight	12 732 kg	13 173 kg

*Engine meets EU Stage V emission standards.

Making Your Choice Easy

Purpose Built Configuration
Power when you need it with a unique Power Balance tuning giving you the boost you need for silage work. Wide set 750/65 MegaXbib tires keep you rolling with maximum stability, while a quick reverse speed improves your productivity. Breathe clean with high debris package.

Efficiently Powerful
Experience Hybrid like fuel efficiency with a high torque low speed engine working in perfect harmony with an intelligent hydrostatic power train and variable displacement hydraulic pumps. For your highest production work, a new Performance Mode will allow you to boost the power and hydraulic speed to get the job done even quicker.

Work Made Easy
Move more with Caterpillar's patented quick loading Performance Series buckets and optimized Z-bar linkage. Multi-function work has never been easier with dedicated pumps and a flow sharing implement valve. The 926M Ag Handler will simply do what you ask it to.

Enjoy All Day Comfort
Have a seat and enjoy whisper quiet sound levels, all around visibility and seat mounted joystick controls. The large spacious cab combined with Caterpillar's exclusive hydraulic cylinder dampening make this the most comfortable seat on the farm.

Contents

Purpose Built Configuration 4
Efficiently Powerful 6
Work Made Easy 8
Enjoy All Day Comfort 10
Customize Your Experience 12
Configured for Success 13
Service 14
Customer Support 14
926M Ag Handler Specifications 15
Bucket Specifications 20
Bucket Selection Tables 22
Specifications – High Dump 24
Bucket Selection Tables – High Dump 25
Operating Specifications 26
Supplemental Specifications 27
Standard and Optional Equipment 28
Notes 29

Environmental and customer friendly –
Up to 95% recyclable content by weight

The Cat 926M Ag Handler sets a new standard for productivity, fuel efficiency and comfort. A high torque, low speed C7.1 engine works in concert with an intelligent hystat power train to deliver fuel efficiency as standard. A unique Power Balance in Range 1 for silage work maximizes productivity. Extremely low sound levels, large spacious cab and intuitive controls keep you working comfortably all day and even all night! Experience the new industry benchmark.

Purpose Built Configuration

Maximize performance and productivity while minimizing operating costs.

Unique Power Balance

Range 1: Hystat Power is maximized for silage work by a unique power distribution tuned to keep you moving and flicking silage while working the steepest slopes.

Wide Set 750 Tires

Maximize your stability with 750/65 MegaXbib flotation tires for rolling the clamp and working the side walls. A high mounted fender and added tire clearance keeps your windows clean and you working.

Fuel Efficient Quick Reverse

Roll the silage clamp efficiently with an adjustable forward rolling speed. Caterpillar's exclusive intelligent Hydrostatic Power Train allows you to interdependently adjust your forward speed in Range 1 from 1 km/h to 13 km/h while reverse speed stays fixed at a quick 13 km/h.

Breathe Clean

Maximize engine life and extend filter cleaning intervals with a turbine ejector precleaner. Keep cool with a reversing fan to purge the single plain, widely spaced core cooling package.

Efficiently Powerful

Experience hybrid like fuel efficiency with more power when you need it.

Intelligent Power Management

The Caterpillar exclusive Intelligent Power Management system monitors operator input and power availability to keep the machine working at peak efficiency.

Power on Demand

A choice of Power Modes allows you to choose between maximum fuel efficiency or boosted power along with hydraulic speed to get your work done even quicker.

Standard Power Mode

- Saves up 10% fuel while running at an efficient 1,600 rpm.
- Recommended for load and carry along with roading applications to maximize fuel efficiency.
- Reduces cab sound levels down to a whisper quiet 64 dB(A) typical.

Performance Power Mode

- Enabled at the push of a button (HP+).
- Boosts engine power by up to 10% in all speed ranges.
- Increases engine speed by over 12%.
- Maximize hydraulic cycle times and productivity.

Six Cylinders of Efficient Power

The Cat C7.1 engine provides cleaner, quieter operation while delivering superior performance and durability through a high torque, low speed design. The engine meets Stage V emission requirements with a Clean Emissions Module that is designed to manage itself so you can concentrate on your work.

- **No downtime for regeneration** with a passive low temperature system that keeps you on the job.
- **Fit for Life Diesel Particulate Filter** that is designed to exceed the engine overhaul life.
- **Extended fluid fill intervals** with minimal use of Diesel Exhaust Fluid (DEF) also referred to as Adblue™ with up to four fuel tank fills per DEF fill.
- **Configurable auto idle shut down** based on time and ambient temperature to further reduce fuel burn and keep operating costs low.

Power to the Ground

Lock up and go with fully locking front differential axle that can be engaged on the move at full torque with the pull of a trigger on the seat mounted joystick. Maximize your traction with optional Limited Slip Differential on the rear axle to keep you climbing.

Independent service brakes on front and rear axles provide robust stopping performance while a push button electronic park brake allows you to safely secure the machine with ease.

Work Made Easy

Getting the job done.

Optimized Z-bar Linkage

The Caterpillar patented optimized Z-bar linkage combines the digging efficiency of a traditional Z-bar with integrated tool carrier capabilities for great performance and versatility.

- **Perfect Parallelism** functionality available in Fork Mode gives truly predictable performance while high tilt forces throughout the working range help you safely and confidently handle loads with precise control.
- **Visibility** to bucket corners and fork tips at ground level remain excellent while sight lines at maximum lift are improved with a Generation III lift arm design.
- **Lift higher and reach further** with optional High Lift linkage.

Quick Loading Performance Series Buckets

Performance Series Buckets deliver up to 10% higher fill factors and better material retention for significant productivity and fuel efficiency improvements. The buckets feature a longer floor to take a bigger bite of the pile, an open throat to heap higher and curved side bars to help with material retention. This optimized shape is echoed across the General Purpose, Light Material and High Dump bucket families.

Smooth and Predictable Multi-Function Performance

M Series machines feature an electro-hydraulic control system that is governed by the Intelligent Power Management system for peak efficiency. The load-sensing, variable flow system senses work demand and adjusts flow and pressure to match the operators request.

- **Multi-Function without compromise** through dedicated hydraulic systems featuring one pump for the Intelligent Hydrostatic drive, a 2nd pump for the implements, and a 3rd pump for the steering system. Drive, Lift and Steer simultaneously with smooth predictable control. The M Series simply does what you ask it to.
- **Programmable in-cab kick-outs** are easy to set on the go for tilt, lower and lift. This feature is ideal for applications where the work cycle is repeatable, allowing you to quickly return to programmed set points such as ground and level.
- **Fine tune hydro-mechanical performance** with fully adjustable 3rd and 4th function flow through the secondary display (when equipped) for a perfect marriage between machine and attachments.

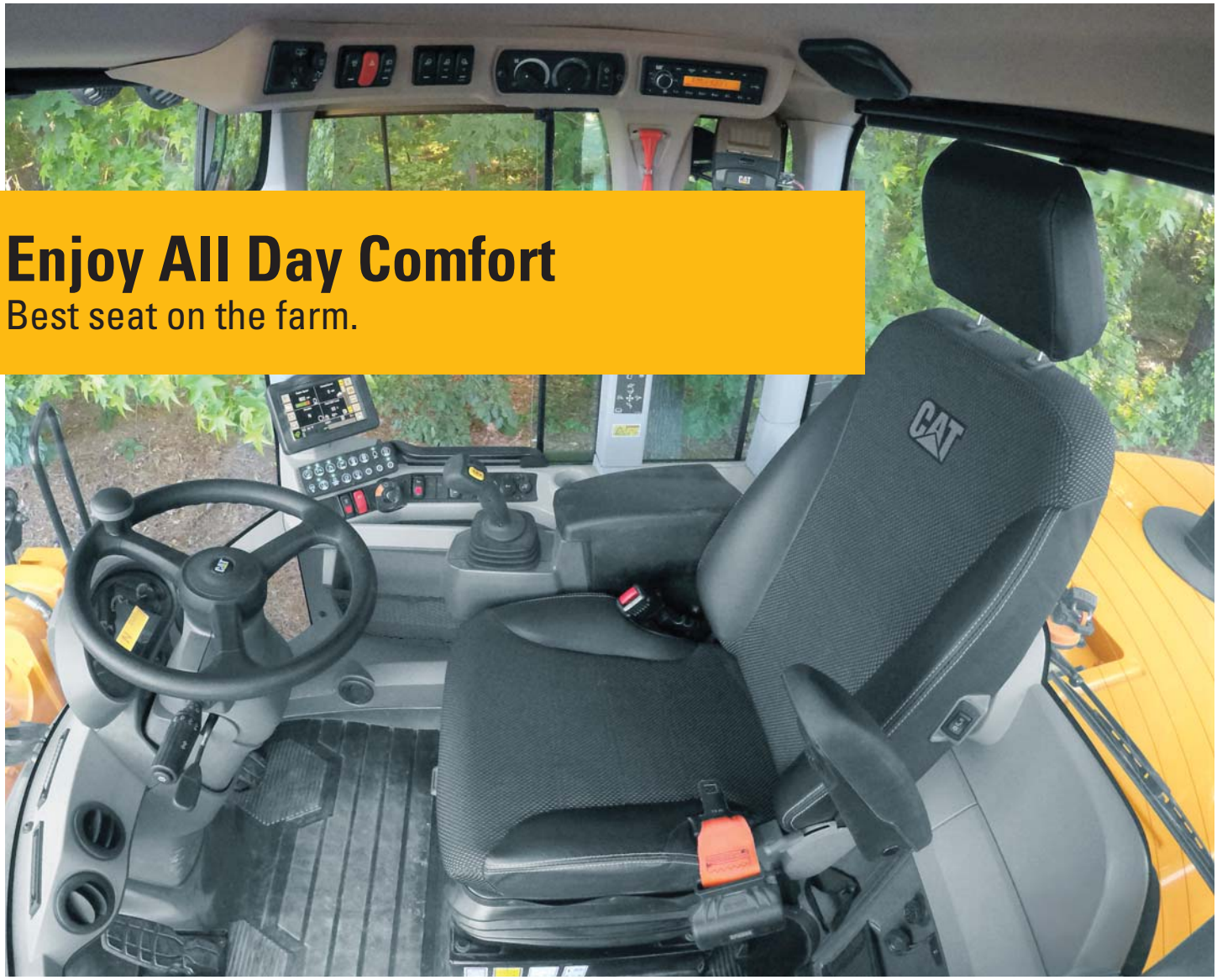

Enjoy All Day Comfort

Best seat on the farm.

Have a Seat and Experience:

- **Seat-mounted controls** featuring a low effort joystick for lift and tilt functions along with integrated Forward/Neutral/Reverse switch, differential lock trigger and optional third and fourth auxiliary functions.
- **Superior all around visibility** with single piece front windshield, new parabolic external mirrors, redesigned Generation III linkage and clean hydraulic lines routing.
- **Automatic climate control** with heated rear glass and external mirrors for a quick defrost.
- **Fully adjustable controls** including steering column, joystick and seat suspension.
- **Information at a glance** with large primary LCD display and full color secondary display.
- **An extra eye on the job site** with rearview camera and optional integrated object detection and optional* forward facing camera system.
- **A heated and cooled seat** option for added comfort in a wide range of climates.

*Forward facing camera system may be required for local EU requirements.
Consult your local Cat Dealer for additional information.

An Easy Day at Work with:

- **A spacious, safe, quiet operator environment** featuring ergonomic controls, seat belt notification and optional bluetooth radio with integrated microphone plus an MP3 port.
- **Easy access to vital machine parameters** with a secondary display that works in conjunction with the standard soft touch panel to allow real time adjustments to machine features and an integrated help button with over 25 languages.
- **Comfortable soft stops at cylinder end stroke** conditions and programmed kickout points with Caterpillar's exclusive electro-hydraulic cylinder dampening.
- **An even smoother ride** with optional Ride Control when working unloaded and loaded with excellent material retention.
- **Early starts and late finishes** are made easier with optional LED lighting package that includes engine compartment lighting to illuminate the way for checking oil, and coolant level along with re-fueling the machine in dark conditions.

Customize Your Experience

Make it yours.

Work as one with your machine by easily adjusting the power train and hydraulics to meet your personal preferences.

Flexible Power Train

A smooth, step-less electronically controlled hydrostatic transmission provides adjustable power to the ground with excellent groundspeed control and customizable feel.

- **Select your Power Train Mode:**
  - Torque Converter (TC) for smooth rollout.
  - Hystat for aggressive engine braking.
  - Default mode which blends the best of Hystat and Torque Converter characteristic.
- **Reduce tire wear** using Rimpull Control which enables you to match available tractive power to underfoot conditions.
- **Set Directional Shift Response**, soft and smooth for material handling applications or sharp for aggressive operation.

Adjustable Electro Hydraulic Controls

Easily customize the hydraulic performance through secondary display to optimize your efficiency.

- **Optimize hydraulic modulation** with Fine Mode control when working with forks and long tools such as grain push arms.
- **Quicker hydraulic response** for a quick silage flick through Lift and Tilt response settings.
- **Fully adjustable ride control** activation speed along with 3rd and 4th function auxiliary flows.

Operator Profiles and Coded Start

- The 926M Ag Handler will remember you and your personal settings with unique operator codes to make this machine truly yours and keep it secure when sitting away from home overnight.

Configured for Success

Ready to work for you.

The Way You Want It

A complete range of optional equipment and work tools give you the versatility to configure a 926M Ag Handler to be successful in your business. Get with your Caterpillar dealer to configure yours.

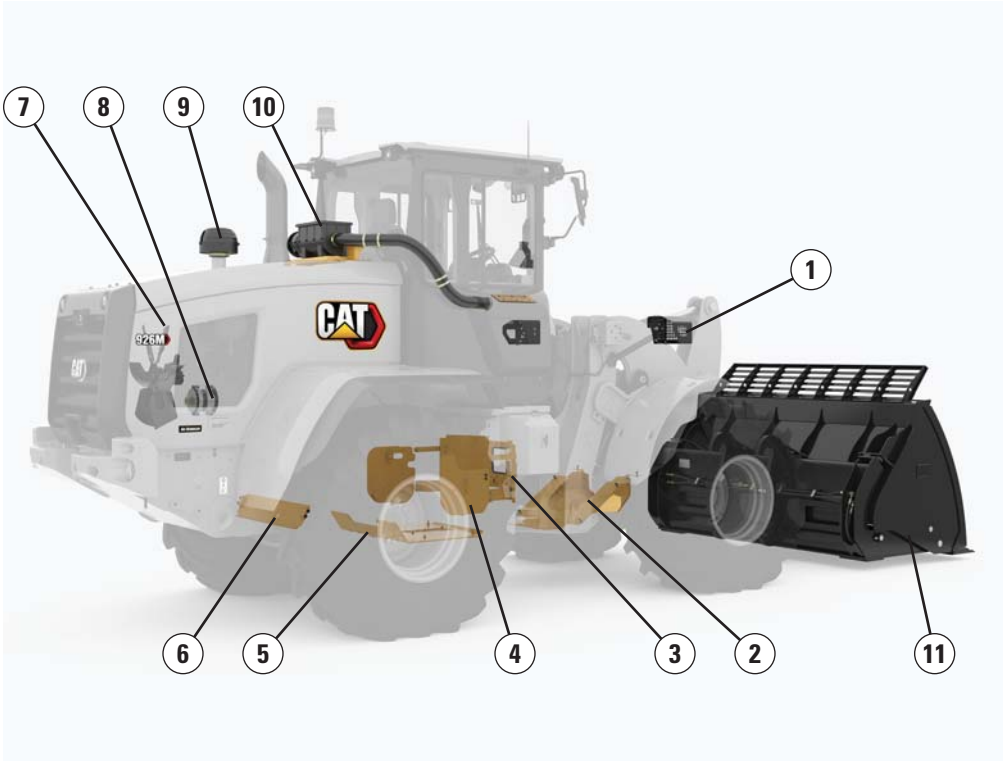

Guards:

1) *Lights*
2) *Drive shaft*
3) *Hitch*
4) *Side power train*
5) *Lower power train*
6) *Crank case*

Debris Packages:

7) *Reversing fan*
8) *Sealed alternator*
9) *Turbine precleaner*
10) *RESPA precleaner*

Attachments:

11) *Full range of tools*

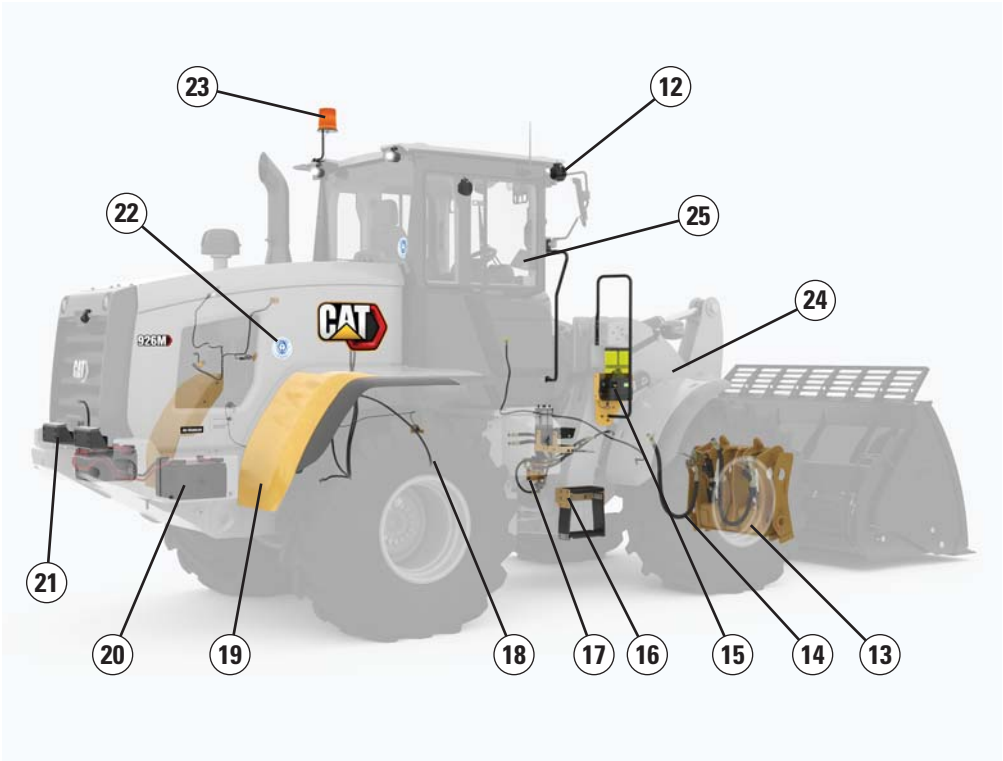

Other Options:

12) *LED auxiliary lights*
13) *Coupler: Fusion™ and ISO*
14) *Auxiliary hydraulics: 3rd and 4th*
15) *Autolube*
16) *Windshield washing platform*
17) *Ride control*
18) *Elevated breathers: axles and gear box*
19) *Fenders: extended and full coverage*
20) *Cold start package*
21) *Rear object detection*
22) *Blue Angel certification*
23) *Beacon*
24) *High Lift*
25) *CPM – Cat Production Measurement*

Service

Schedule your downtime to maximize your up time.

Get up and running quickly with ground level, daily service access and optional engine compartment lighting. Three large service doors can be opened and closed in any order to give full access to filters and service points. Extended service intervals on hydraulic and power train filters reduce service time and maximize uptime. Additional service features include:

- **Product Link™ PRO standard** with three year subscription to VisionLink®.
- **Maintenance reminders** through secondary display at scheduled intervals.
- **Fit for Life Diesel Particulate Filter** that is designed to exceed the engine overhaul life.
- **Quick fuel filter service** with Caterpillar's exclusive electric fuel priming pump.
- **Jump start studs** as standard equipment.
- **Extended cleanouts** with single plane cooling system and wide spaced six fins per inch coolers as standard.
- **Integrated Autolube** (optional) with adjustable greasing frequency.

Customer Support

Unmatched service makes the difference.

Renowned Cat Dealer Support

Rely on your Cat dealer to help you every step of the way with new or used machine sales, rental or rebuild options to meet your business needs.

Maximize your machine uptime with unsurpassed worldwide parts availability, trained technicians and customer support agreements.

Let us earn your business. Experience an M Series Small Wheel Loader and join the Caterpillar family.

Engine

Cat C7.1*				
Power Mode	**Performance (HP+)**		**Standard**	
	Range 1-4		**Range 1-3****	
Maximum Gross Power	**kW**	**hp**	**kW**	**hp**
Maximum Engine Speed	1,800 rpm		1,600 rpm	
ISO 14396	125	168	119	160
ISO 14396 (metric)	170 hp		162 hp	
Net Power				
SAE J1349 at Minimum Fan Speed	122	163	116	156
ISO 9249 at Minimum Fan Speed	122	164	116	156
ISO 9249 (metric) at Minimum Fan Speed	166 hp		158 hp	
Maximum Gross Torque	**N·m**		**N·m**	
ISO 14396	815		795	
Maximum Net Torque				
SAE J1349	797		777	
ISO 9249	796		776	
Displacement	7.01 L			
Bore	105 mm			
Stroke	135 mm			

*The Cat C7.1 engine meets Tier 4 Final/Stage V emission standards.
**Range 4 power and torque is equal to Performance Mode with Caterpillar Power by Range technology.

- Net power ratings are tested at the reference conditions for the specified standard and denote power available at the flywheel when the engine is equipped with alternator, air cleaner, emission components and fan at specified speed.
- No derating required up to 3000 m (10,000 ft) altitude. Auto derate protects hydraulic and transmission systems.

Engine Torque

926M Ag Handler

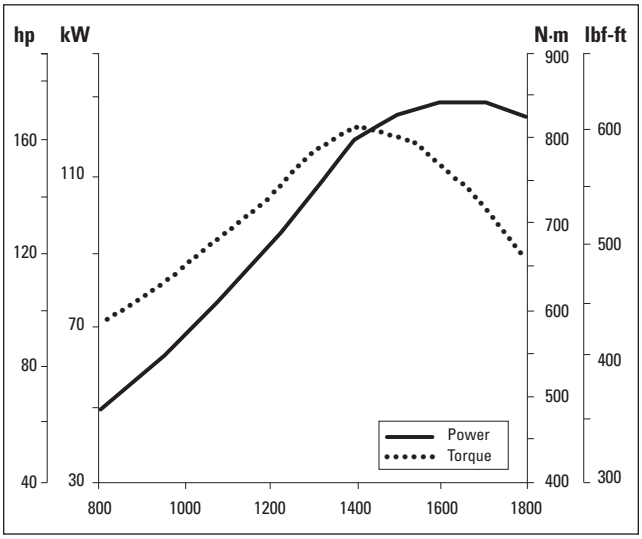

926M Ag Handler Specifications

Cab

- ROPS: SAE J1040 MAY94, ISO 3471-1994
- FOPS: SAE J/ISO 3449 APR98, Level II, ISO 3449 1992 Level II

Declared Sound Levels:
- Operator Sound Pressure Level (ISO 6396:2008): 68 dB(A)*
- Exterior Sound Power Level (ISO 6395:2008): 101 dB(A)*

*The measurements were conducted at 70% of the maximum engine cooling fan speed. The sound level may vary at different engine cooling fan speeds. The cab was properly installed and maintained. The measurements were conducted with the cab doors and the cab windows closed.

- The Blue Angel environmental label is an optional attachment.

Loader Hydraulic System

- Implement system uses a dedicated load sensing variable displacement pump with dual double acting lift cylinders and a single double acting tilt cylinder.
- Flow values listed are for a machine running in Performance Power Mode (1,800 rpm).

* 3rd and 4th function flow is fully adjustable from 20% to 100% of maximum flow through the secondary display.

Maximum Flow – Implement Pump	150 L/min
3rd and 4th Function Maximum Flow*	150 L/min
Maximum Working Pressure – Implement Pump	26 000 kPa
Relief Pressure – Tilt Cylinder	28 000 kPa
3rd and 4th Function Maximum Working Pressure	26 000 kPa
3rd and 4th Function Relief Pressure	28 000 kPa
Lift Cylinder: Standard Lift Linkage	
Bore Diameter	110 mm
Rod Diameter	60 mm
Stroke	728 mm
Tilt Cylinder: Standard Lift Linkage	
Bore Diameter	140 mm
Rod Diameter	75 mm
Stroke	516 mm
Cycle Times (1,800 rpm) – Performance (HP+)	
Raise (Ground Level to Maximum Lift)	5.5 seconds
Dump (at Maximum Lift Height)	1.5 seconds
Float Down (Maximum Lift to Ground Level)	2.6 seconds
Total Cycle Time	9.6 seconds
Cycle Times (1,600 rpm) – Standard	
Raise (Ground Level to Maximum Lift)	6.2 seconds
Dump (at Maximum Lift Height)	1.7 seconds
Float Down (Maximum Lift to Ground Level)	2.6 seconds
Total Cycle Time	10.5 seconds

Steering

- Steering system uses a dedicated load sensing variable displacement pump with dual double acting cylinders.
- Flow values listed are for a machine running in Performance Power Mode (1,800 rpm).

Steering Articulation Angle Each Direction	40°
Steering Cylinder: Double Acting	
Bore Diameter	70 mm
Rod Diameter	40 mm
Stroke	438 mm
Maximum Flow – Steering Pump	130 L/min
Maximum Working Pressure – Steering Pump	24 130 kPa
Steering Cycle Times (Full Left to Full Right)	
Minimum rpm: Pump Flow Limited	2.8 seconds
Maximum rpm: 90 rpm Steering Wheel Speed	2.4 seconds
Number of Steering Wheel Turns	
Full Left to Full Right or Full Right to Full Left	3.5

Transmission

* Creeper control allows maximum speed range adjustability in the forward direction from 1 km/h to 13 km/h in Range 1 through the secondary display when equipped. Factory default is 7 km/h. Maximum reverse speed will be maintained at 13 km/h in Range 1 for a quick reverse.

	Forward	Reverse
Range 1*	*1-13 km/h	13 km/h
Range 2	13 km/h	13 km/h
Range 3	27 km/h	27 km/h
Range 4	40 km/h	40 km/h

926M Ag Handler Specifications

Power Train

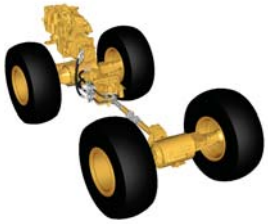

- Power train is governed by the Caterpillar exclusive Intelligent Power Management system to deliver peak performance and efficiency.

* Differential front locking axle can be engaged on the go at full torque to 10 km/h.

Front Axle	Fixed
Traction Aid*	Locking differential standard
Rear Axle	Oscillating
Oscillation Angle by Tire Size	
20.5 R25	± 10.5 degrees
750/65, 620/65	± 7 degrees
Traction Aid	Limited slip differential optional
Brakes	
Service	Inboard wet disc
Park	Spring applied hydraulically released

Tires

* Base specification tire. Other tire choices available, contact your Cat dealer for details.	
20.5 R25, Radial (L-3)	Yes
20.5 R25, Radial (L-5)	Yes
620/65 R25 Ag Tire	Yes
750/65 R25 Ag Tire*	Yes

Service Refill Capacities

Fuel Tank	195 L
Diesel Exhaust Fluid (DEF) Tank	19 L
Cooling System	30 L
Engine Crankcase	20 L
Transmission (Gear Box)	8.5 L
Axles	
Front	21 L
Rear	21 L
Hydraulic System (Including Tank)	160 L
Hydraulic Tank	90 L

Dimensions with Bucket

All dimensions are approximate. Dimensions will vary with bucket and tire choice. Refer to Operating Specifications with Buckets.

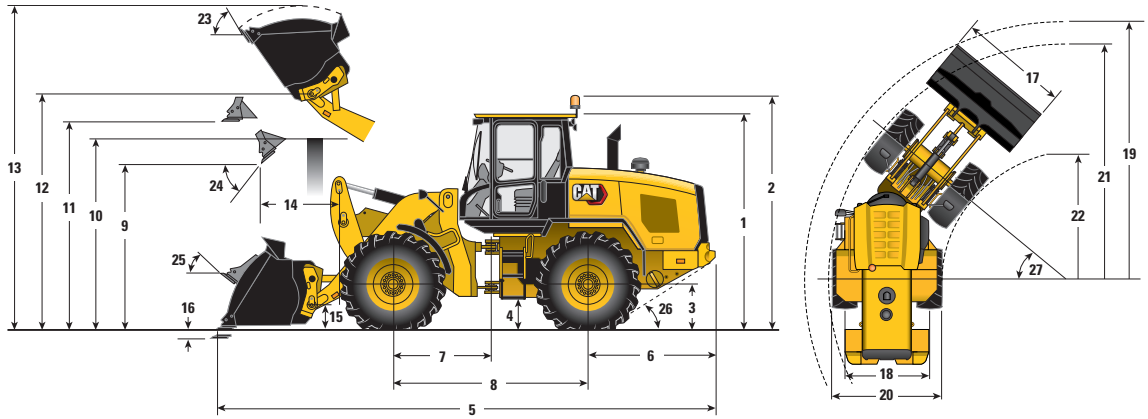

*Vary with bucket. **Vary with tire.	Standard Lift	High Lift
** 1 Height: Ground to Cab	3415 mm	3415 mm
** 2 Height: Ground to Beacon	3782 mm	3782 mm
** 3 Height: Ground Axle Center	760 mm	760 mm
** 4 Height: Ground Clearance	472 mm	472 mm
* 5 Length: Overall	7391 mm	8084 mm
6 Length: Rear Axle to Bumper	1953 mm	1953 mm
7 Length: Hitch to Front Axle	1500 mm	1500 mm
8 Length: Wheel Base	3000 mm	3000 mm
* 9 Clearance: Bucket at 45°	2899 mm	3396 mm
** 10 Clearance: Load Over Height	3426 mm	3625 mm
** 11 Clearance: Level Bucket	3651 mm	4148 mm
** 12 Height: Bucket Pin	3978 mm	4475 mm
** 13 Height: Overall	5218 mm	5715 mm
* 14 Reach: Bucket at 45°	901 mm	1234 mm
15 Carry Height: Bucket Pin	367 mm	575 mm
** 16 Dig Depth	25 mm	60 mm
17 Width: Bucket	2550 mm	2550 mm
18 Width: Tread Center	2020 mm	2020 mm
19 Turning Radius: Over Bucket	5906 mm	6239 mm
20 Width: Over Tires	2810 mm	2810 mm
21 Turning Radius: Outside of Tires	5557 mm	5557 mm
22 Turning Radius: Inside of Tires	2716 mm	2716 mm
23 Rack Angle at Full Lift	53°	51°
24 Dump Angle at Full Lift	49°	48°
25 Rack Angle at Carry	39°	46°
26 Departure Angle	33°	33°
27 Articulation Angle	40°	40°
Operating Weight	12 994 kg	13 272 kg

Dimensions listed are for a 926M Ag Handler configured with General Purpose 2.1 m^3 Fusion buckets, bolt-on cutting edges, standard counterweights, 80 kg operator, and Michelin 750/65 R26 MegaXbib tires at a pressure of 2.76 bar in the front tires and 2.06 bar in the rear tires.

926M Ag Handler Bucket Specifications

Standard Lift Operating Specifications with Buckets

			General Purpose			Light Material		
			Fusion			Fusion		
	Rated Capacity	m³	2.1	2.3	2.6	3.5	4.2	5.0
	Capacity – Rated at 110% Fill Factor	m³	2.3	2.5	2.9	3.9	4.6	5.5
17	Width: Bucket	mm	2550	2550	2942	2750	2750	2750
	Nominal Material Density, 110% Fill Factor	kg/m³	1620	1476	1184	893	731	608
9	Clearance: Full Lift, 45° Dump	mm	2899	2850	2809	2670	2550	2550
14	Reach: Full Lift, 45° Dump	mm	901	939	771	1003	1123	1123
	Reach: 2130 mm Clearance, 45° Dump	mm	1481	1493	1360	1455	1495	1495
	Reach: Level Arm, Level Bucket	mm	2278	2341	2171	2531	2701	2701
16	Dig Depth	mm	25	25	80	25	25	25
5	Length: Overall	mm	7391	7454	7331	7644	7814	7814
13	Height: Overall	mm	5218	5276	5198	5380	5542	5823
19	Turning Radius Bucket at Carry	mm	6122	6141	6282	6288	6342	6342
	Tipping Load – Straight, ISO 14397-1*	kg	8721	8640	8083	8198	7936	7900
	Tipping Load – Full Turn, ISO 14397-1*	kg	7453	7379	6867	6962	6722	6684
	Breakout Force	kg	10 718	10 129	10 049	8567	7525	7471
	Operating Weight	kg	12 732	12 770	13 013	13 093	13 223	13 300

			General Purpose			Light Material		
			ISO 23727			ISO 23727		
	Rated Capacity	m³	2.1	2.3	2.6	3.5	4.2	5.0
	Capacity – Rated at 110% Fill Factor	m³	2.3	2.5	2.9	3.9	4.6	5.5
17	Width: Bucket	mm	2550	2550	2942	2750	2750	2750
	Nominal Material Density, 110% Fill Factor	kg/m³	1544	1406	1144	856	697	581
9	Clearance: Full Lift, 45° Dump	mm	2804	2755	2744	2604	2433	2433
14	Reach: Full Lift, 45° Dump	mm	1020	1056	1006	1034	1154	1205
	Reach: 2130 mm Clearance, 45° Dump	mm	1550	1559	1502	1443	1477	1489
	Reach: Level Arm, Level Bucket	mm	2429	2492	2458	2600	2770	2842
16	Dig Depth	mm	18	18	74	50	50	50
5	Length: Overall	mm	7537	7600	7613	7734	7904	7976
13	Height: Overall	mm	5320	5378	5283	5450	5616	5904
19	Turning Radius Bucket at Carry	mm	6169	6189	6370	6318	6373	6397
	Tipping Load – Straight, ISO 14397-1*	kg	8312	8234	7807	7864	7580	7557
	Tipping Load – Full Turn, ISO 14397-1*	kg	7101	7028	6632	6678	6414	6389
	Breakout Force	kg	9330	8865	9000	8079	6803	6758
	Operating Weight	kg	12 702	12 740	12 951	13 017	13 180	13 240

*Full compliance to ISO 14397-1 (2007) Sections 1 thru 6, which requires 2% verification between calculation and testing.

Dimensions listed are for a 926M Ag Handler configured with buckets, bolt-on cutting edges, standard counterweights, 80 kg operator, and Michelin 750/65 R26 MegaXbib tires at a pressure of 2.76 bar in the front tires and 2.06 bar in the rear tires.

High Lift Operating Specifications with Buckets

			General Purpose			Light Material		
			Fusion			Fusion		
	Rated Capacity	m³	2.1	2.3	2.6	3.5	4.2	5.0
	Capacity – Rated at 110% Fill Factor	m³	2.3	2.5	2.9	3.9	4.6	5.5
17	Width: Bucket	mm	2550	2550	2942	2750	2750	2750
	Nominal Material Density, 110% Fill Factor	kg/m³	1175	1069	853	637	519	429
9	Clearance: Full Lift, 45° Dump	mm	3396	3347	3306	3182	3063	3063
14	Reach: Full Lift, 45° Dump	mm	1234	1272	1104	1357	1479	1479
	Reach: 2130 mm Clearance, 45° Dump	mm	2115	2134	1992	2120	2180	2180
	Reach: Level Arm, Level Bucket	mm	2848	2911	2740	3101	3271	3271
16	Dig Depth	mm	60	60	115	60	60	60
5	Length: Overall	mm	8084	8147	8011	8337	8507	8507
13	Height: Overall	mm	5715	5773	5695	5877	6039	6320
19	Turning Radius Bucket at Carry	mm	6420	6443	6569	6596	6659	6659
	Tipping Load – Straight, ISO 14397-1*	kg	6392	6327	5898	5932	5720	5666
	Tipping Load – Full Turn, ISO 14397-1*	kg	5405	5345	4946	4969	4772	4719
	Breakout Force	kg	8991	8491	8401	7147	6258	6203
	Operating Weight	kg	13 173	13 210	13 454	13 533	13 663	13 741

			General Purpose			Light Material		
			ISO 23727			ISO 23727		
	Rated Capacity	m³	2.1	2.3	2.6	3.5	4.2	5.0
	Capacity – Rated at 110% Fill Factor	m³	2.3	2.5	2.9	3.9	4.6	5.5
17	Width: Bucket	mm	2550	2550	2942	2750	2750	2750
	Nominal Material Density, 110% Fill Factor	kg/m³	1130	1027	831	618	499	414
9	Clearance: Full Lift, 45° Dump	mm	3302	3252	3241	3117	2949	2949
14	Reach: Full Lift, 45° Dump	mm	1352	1389	1338	1390	1513	1564
	Reach: 2130 mm Clearance, 45° Dump	mm	2196	2211	2156	2119	2176	2198
	Reach: Level Arm, Level Bucket	mm	2999	3062	3028	3170	3340	3412
16	Dig Depth	mm	53	53	108	85	85	85
5	Length: Overall	mm	8230	8293	8295	8422	8592	8664
13	Height: Overall	mm	5817	5875	5780	5947	6114	6402
19	Turning Radius Bucket at Carry	mm	6475	6499	6672	6631	6695	6722
	Tipping Load – Straight, ISO 14397-1*	kg	6148	6083	5744	5749	5509	5470
	Tipping Load – Full Turn, ISO 14397-1*	kg	5197	5137	4818	4817	4592	4552
	Breakout Force	kg	7802	7407	7497	6723	5637	5591
	Operating Weight	kg	13 142	13 180	13 391	13 457	13 620	13 680

*Full compliance to ISO 14397-1 (2007) Sections 1 thru 6, which requires 2% verification between calculation and testing.

Dimensions listed are for a 926M Ag Handler High Lift configured with buckets, bolt-on cutting edges, standard counterweights, 80 kg operator, and Michelin 750/65 R26 MegaXbib tires at a pressure of 2.76 bar in the front tires and 2.06 bar in the rear tires.

926M Ag Handler Bucket Selection Tables

General Purpose Bucket Selection – Standard Lift

926M Ag Handler

Material Type				Coal Anthracite, Washed / Gypsum, Pulverized	Earth, Loam, Dry / Salt, Fine	Lime, Granules / Shale	Sand, Dry and Loose / Clay and Gravel, Dry	Clay, Natural Bed, Dry / Sandstone	Limestone, Crushed / Clay and Gravel, Wet	Sand and Clay, Loose / 25% Rock, 75% Earth	Gypsum, Crushed / Granite, Broken	Clay, Natural Bed, Wet / Sand and Gravel, Dry	Sand, Damp / 50% Rock, 50% Earth		Tip Load Full Turn*
Fill Factor %				110%	110% / 105%	105% / 110%	105%	105% / 110%	105% / 110%	105% / 115%	105% / 110%	105% / 110%	110% / 115%		
		m³	Counter-weight kg/m³	1050	1125	1200	1275	1350	1425	1500	1575	1650	1725	1800	kg
Fusion		2.1	Standard							115%	110%	105%	100%		7453
Fusion		2.3	Standard					115%	110%	105%	100%				7379
Fusion		2.6	Standard	115%	110%	105%	100%								6867
ISO		2.1	Standard						115%	110%	105%	100%			7101
ISO		2.3	Standard				115%	110%	105%	100%					7028
ISO		2.6	Standard	115%	110%	105%	100%								6632

Light Material Bucket Selection – Standard Lift

926M Ag Handler

Material Type				Mulch, Wet	Flour, Wheat / Barley, Bulk / Compacted Solid Waste / Buckwheat, Bulk	Asphalt, Crushed / Corn Shelled, Bulk	Soy Beans, Bulk / Wet Muck	Wheat, Bulk / Bulk Grain	Sugar, Beat / Silage, Packed	Manure/Muck, Wet	Coal Bituminous, Washed / Peat, Moist	Corn, Ear / Sugar, Raw Cane	Coal Bituminous, Raw	Lime, Pulverized Quick / Fertilizer, Mixed		Tip Load Full Turn*
Fill Factor %				115%	110% / 100% / 115%	100%	110% / 100%	100% / 100%	105% / 115%	110%	110% / 110%	100%	105% / 110%	110% / 105%		
		m³	Counter-weight kg/m³	560	605	650	695	740	785	830	875	920	965	1010	kg
Fusion		3.5	Standard							115%	110%	105%	100%		6962
Fusion		4.2	Standard				115%	110%	105%	100%					6722
Fusion		5	Standard	115%	110%	105%	100%								6684
ISO		3.5	Standard						115%	110%	105%	100%			6678
ISO		4.2	Standard			115%	110%	105%	100%						6414
ISO		5	Standard	115%	110%	105%	100%								6389

*Full compliance to ISO 14397-1 (2007) Section 1 thru 6, which requires 2% verification between calculation and testing.

Material density, fill factor, and counterweight options are key variables when choosing the appropriate size of the bucket. The long floor and open throat design of the Performance Series Buckets along with the aggressive rack angles of the optimized linkage will demonstrate fill factors greater than 100% ISO rated. Refer to the expected fill factor % per material type at the top of the table and find a matching counterweight and fill factor along the side for proper bucket sizing.

General Purpose Bucket Selection – High Lift

926M Ag Handler

Material Type				Corn Shelled, Bulk	Soy Beans, Bulk	Wet Muck	Glass, Semi Crushed	Bulk Grain	Sugar, Beat	Silage, Packed	Coal Bituminous, Washed	Peat, Moist	Sugar, Raw Cane	Coal Bituminous, Raw	Fertilizer, Mixed	Coal Anthracite, Washed	Gypsum, Pulverized	Peat, Wet	Earth, Loam, Dry	Salt, Fine	Heavy Metal Scrap, Loose	Lime, Granules	Tip Load Full Turn*
Fill Factor %				100%	100%	110%	105%	100%	105%	115%	110%	110%	105%	110%	105%		110%	110%	110%	110%	105%	110%	105%	
		m³	Counter-weight	kg/m³	700		760		820		880			940		1000		1060		1120		1180		1240		1300	kg
Fusion		2.1	Standard															115%		110%		105%		100%			5405
Fusion		2.3	Standard												115%		110%	105%		100%							5345
Fusion		2.6	Standard				115%		110%		105%		100%														4946
ISO		2.1	Standard														115%		110%		105%		100%				5197
ISO		2.3	Standard											115%		110%		105%		100%							5137
ISO		2.6	Standard				115%		110%		105%		100%														4818

Light Material Bucket Selection – High Lift

926M Ag Handler

Material Type				Beet Pulp	Alfalfa Meal	Paper, Semi Compacted	Yard Waste	Food Scraps	Glass, Whole Bottles	Brewers Grain	Woodchips, Dry	Mulch, Wet	Flour, Wheat	Barley, Bulk	Compacted Solid Waste	Corn Shelled, Bulk	Soy Beans, Bulk	Tip Load Full Turn*
Fill Factor %				110%	100%	115%	115%	115%	110%	105%	110%	115%	110%	100%	115%	100%	100%	
		m³	Counter-weight	kg/m³	300		345		390		435		480		525	570		615		660		705		750	kg
Fusion		3.5	Standard														115%		110%		105%		100%			4969
Fusion		4.2	Standard									115%		110%		105%		100%								4772
Fusion		5.0	Standard						115%		110%	105%	100%													4719
ISO		3.5	Standard														115%		110%		105%		100%			4817
ISO		4.2	Standard									115%		110%		105%		100%								4592
ISO		5.0	Standard						115%		110%	105%	100%													4552

*Full compliance to ISO 14397-1 (2007) Section 1 thru 6, which requires 2% verification between calculation and testing.

Material density, fill factor, and counterweight options are key variables when choosing the appropriate size of the bucket. The long floor and open throat design of the Performance Series Buckets along with the aggressive rack angles of the optimized linkage will demonstrate fill factors greater than 100% ISO rated. Refer to the expected fill factor % per material type at the top of the table and find a matching counterweight and fill factor along the side for proper bucket sizing.

Operating Specifications with High Dump Buckets

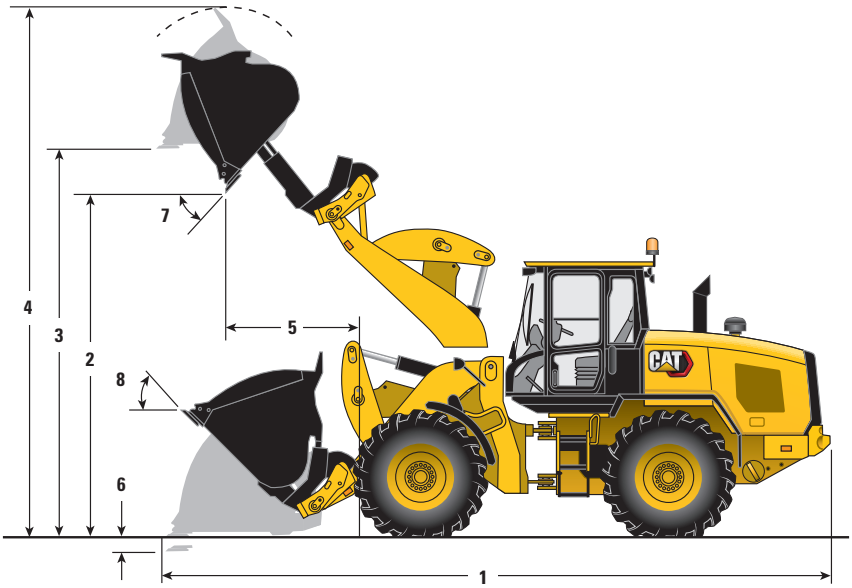

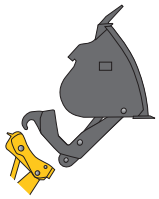

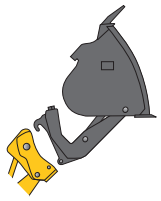

			Standard Lift						High Lift			
			Fusion			ISO 23727			Fusion		ISO 23727	
	Rated Capacity	m³	3.0	3.5	4.1	3.0	3.5	4.1	3.0	3.5	3.0	3.5
	Capacity – Rated at 110% Fill Factor	m³	3.3	3.9	4.5	3.3	3.9	4.5	3.3	3.9	3.3	3.9
	Bucket Width	mm	2528	2728	3032	2528	2728	3032	2528	2728	2528	2728
	Nominal Material Density 110% Fill Factor	kg/m³	954	781	631	888	742	598	671	547	630	523
1	Length: Overall	mm	7781	7847	7925	8033	8033	8112	8473	8539	8727	8727
2	Dump Clearance: Full Lift Rolled Out	mm	4334	4391	4332	4448	4573	4515	4790	4846	4898	5024
3	Clearance: Level Bucket	mm	4667	4670	4708	4802	4901	4886	5132	5135	5258	5361
4	Height: Overall	mm	6330	6376	6429	6464	6607	6587	6794	6841	6920	7067
5	Reach: Full Lift Rolled Out	mm	1261	1299	1330	1448	1398	1430	1607	1647	1798	1752
6	Dig Depth	mm	25	25	40	18	18	33	60	60	53	53
	Turning Radius Bucket at Carry	mm	6028	6139	6302	6109	6197	6359	6373	6480	6453	6536
7	Maximum Dump Angle	degree	50	50	50	56	49	49	52	52	58	51
8	Rack Angle at Carry	degree	38	39	39	40	40	40	45	46	46	46
	Tipping Load – Straight ISO 14397-1*	kg	7471	7245	6816	6967	6894	6474	5350	5175	5037	4959
	Tipping Load – Full Turn ISO 14397-1*	kg	6294	6089	5676	5858	5786	5381	4428	4267	4159	4082
	Breakout Force	kg	7597	7183	6684	6302	6250	5799	6302	5941	5196	5144
	Operating Weight	kg	13 472	13 561	13 892	13 435	13 524	13 854	13 913	14 002	13 875	13 964

*Full compliance to ISO 14397-1 (2007) Section 1 thru 6, which requires 2% verification between calculation and testing.

Dimensions listed are for a 926M Ag Handler configured with buckets, bolt-on cutting edges, standard counterweights, 80 kg operator, and Michelin 750/65 R26 MegaXbib tires at a pressure of 2.76 bar in the front tires and 2.06 bar in the rear tires.

High Dump Bucket Selection – Standard Lift

926M Ag Handler			Material Type	Mulch, Wet	Flour, Wheat	Barley, Bulk	Compacted Solid Waste	Buckwheat, Bulk	Asphalt, Crushed	Corn Shelled, Bulk	Soy Beans, Bulk	Wet Muck	Wheat, Bulk	Bulk Grain	Sugar, Beat	Silage, Packed	Manure/Muck, Wet	Coal Bituminous, Washed	Peat, Moist	Corn, Ear	Sugar, Raw Cane	Coal Bituminous, Raw	Lime, Pulverized Quick	Fertilizer, Mixed	Tip Load Full Turn*
			Fill Factor %	115%	110%	100%	115%	100%	110%	100%	100%	110%	100%	100%	105%	115%	110%	110%	110%	100%	105%	110%	110%	105%	
		m³	Counter-weight / kg/m³	545	590		635		680	725			770		815			860		905		950		995	kg
Fusion		3.0	Standard																115%		110%		105%		100%	6294
Fusion		3.5	Standard							115%			110%		105%		100%									6089
Fusion		4.1	Standard			115%		110%		105%			100%													5676
ISO		3.0	Standard													115%		110%		105%		100%				5858
ISO		3.5	Standard						115%		110%			105%			100%									5786
ISO		4.1	Standard	115%		110%		105%		100%																5381

High Dump Bucket Selection – High Lift

926M Ag Handler			Material Type		Glass, Whole Bottles	Brewers Grain	Woodchips, Dry		Mulch, Wet	Flour, Wheat	Barley, Bulk	Compacted Solid Waste	Compacted Solid Waste	Buckwheat, Bulk			Tip Load Full Turn*
			Fill Factor %		110%	105%	110%		115%	110%	100%	115%	115%	100%			
		m³	Counter-weight / kg/m³	410	440	470	500	530	560	590	620			650	680	710	kg
Fusion		3.0	Standard									115%		110%	105%	100%	4428
Fusion		3.5	Standard				115%	110%	105%	100%							4267
Fusion		4.1	Standard	115%	110%	105%	100%										3885
ISO		3.0	Standard							115%	110%			105%	100%		4159
ISO		3.5	Standard			115%	110%	105%	100%								4082
ISO		4.1	Standard	110%	105%	100%											3705

*Full compliance to ISO 14397-1 (2007) Section 1 thru 6, which requires 2% verification between calculation and testing.

Material density, fill factor, and counterweight options are key variables when choosing the appropriate size of the bucket. The long floor and open throat design of the Performance Series Buckets along with the aggressive rack angles of the optimized linkage will demonstrate fill factors greater than 100% ISO rated. Refer to the expected fill factor % per material type at the top of the table and find a matching counterweight and fill factor along the side for proper bucket sizing.

926M Ag Handler Operating Specifications

Operating Specifications with Forks

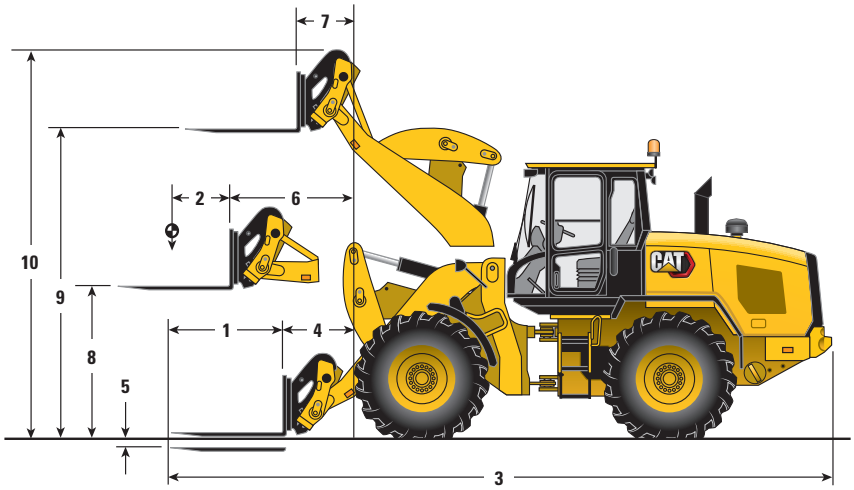

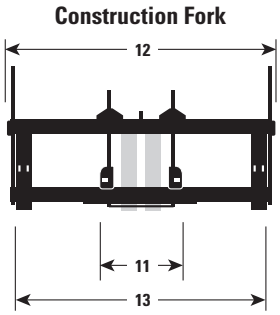

		Standard Lift	High Lift
1 Fork Tine Length	mm	1524	1524
2 Load Center	mm	762	762
3 Length: Overall	mm	8173	8860
4 Reach: Ground	mm	886	1573
5 Height: Minimum (bottom of tine)	mm	51	86
6 Reach: Level Arm	mm	1514	2084
7 Reach: Full Lift	mm	663	996
8 Height: Level Arm (top of tine)	mm	1768	1799
9 Height: Full Lift (top of tine)	mm	3695	4193
10 Height: Overall	mm	5006	5503
11 Minimum Fork Spacing	mm	530	530
12 Carriage Width	mm	2498	2498
13 Maximum Fork Spacing	mm	2375	2375
Tipping Load – Straight ISO 14397-1*	kg	5997	4721
Tipping Load – Full Turn ISO 14397-1*	kg	5116	3984
Operating Weight	kg	12 742	13 182
Rated Load			
50% of Tip: SAE J1197**	kg	2558	1992
60% of Tip: Rough Terrain EN474-3**	kg	3069	2390
80% of Tip: Firm and Level EN474-3**	kg	4092	3187

*Full compliance to ISO 14397-1 (2007) Sections 1 thru 6, which requires 2% verification between calculation and testing.

**Full compliance to EN474-3 and SAE J1197.

Dimensions listed are for a 926M Ag Handler configured with Fusion work tools, heavy counterweights, 80 kg operator, and Michelin 750/65 R26 MegaXbib tires at a pressure of 2.76 bar in the front tires and 2.06 bar in the rear tires.

Optional Equipment

	Operating Weight	Tipping Load – Full Turn
Change with Options Removed	**kg**	**kg**
Ride Control	–49	–27
Change with Options Added	**kg**	**kg**
Guard, Power Train Side	+11	+9
Cold Start Package	+54	+77
Guard, Crankcase	+19	+25
Guard, Power Train Lower	+77	+72
Guard, Driveshaft	+44	+12
Autolube	+64	+23

Tires

Change with Tire Option as Compared to 750/65 R26 MegaXbib Tire	20.5 R25 XHA2 L3	620/75 R26 MegaX
	mm	**mm**
Vertical Heights	–75	–52
Reach: Bucket at 45°	+67	+10
Width: Over Tires	–270	–125
Turning Radius: Outside of Tires	–155	–102
Turning Radius: Inside of Tires	+135	+63
	kg	**kg**
Tipping Load – Straight	–14	–160
Tipping Load – Full Turn	–12	–138
Operating Weight	–20	–236

926M Ag Handler Standard and Optional Equipment

Standard Equipment

Standard equipment may vary. Consult your Cat dealer for details.

POWER TRAIN

- Axle Duo-Cone™ seal guards
- Auto idle shut down feature
- Cat C7.1 engine
  - Power modes (Standard and Performance)
  - Power by range (High Power in Range 4)
  - Turbocharged and aftercooled
  - Diesel particulate filter (Fit for Life)
- Coded start (requires secondary display)
- Differential lock in front axle
- Enclosed wet disc full hydraulic brakes
- Hydraulically driven demand cooling fan
- Hydrostatic transmission with electronic control
  - Operator modes (Default, TC, Hystat, and Ice)
  - Directional Shift Aggressiveness (fast, medium, slow)
  - Rimpull control, adjust wheel torque
  - Creeper control, adjust ground speed
- Parking brake, electric
- Single plane cooling package wide six fins per inch density
- Oil sampling ports
- Throttle lock and max speed limiter

HYDRAULICS

- Automatic lift lower and tilt kickouts, adjustable in-cab
- Bucket and fork modes, adjustable in-cab
- Cylinder damping at kickout and mechanical end stops
- Fine mode control (fast, medium, slow)
- Hydraulic response setting (fast, medium, slow)
- Load sensing hydraulics and steering
- Seat-mounted hydraulic joystick controls

ELECTRICAL

- Alternator, 115 amp, heavy duty
- Batteries, 1,000 CCA (2) 24V system, disconnect switch
- Back-up alarm
- Emergency shutdown switch
- Halogen work and roading lights, LED rear tail lights
- Product Link PRO with three year subscription
- Remote jump start post
- Resettable main and critical function breakers

OPERATOR ENVIRONMENT

- 75 mm (3 in) High-Vis retractable seat belt, with audible alarm and indicator
- Automatic temperature control
- Cab, pressurized
- Camera, rearview
- External heated mirrors with lower parabolic
- Ground level cab door release
- Hydraulic control lockout
- Mirror, single
- Lunch box storage
- Radio ready speakers
- Rear window defrost, electric
- Column mounted multi function control – lights, wipers, turn signal
- Tilt and telescopic steering wheel
- Tinted front glass
- Wet arm wiper/washer, 2-speed and intermittent, front, lights, wipers, turn signal
- Suspension seat, fabric

OTHER STANDARD EQUIPMENT

- Large-access enclosure doors with adjustable close/open force
- Cat optimized Z-bar linkage with parallel lift
- Recovery hitch, with pin
- Remote mounted lubrication points
- Lockable compartments and enclosures

Optional Equipment

Optional equipment may vary. Consult your Cat dealer for details.

- Autolube, integrated in secondary display
- Auxiliary flow, third and fourth function
- Differential, limited slip, rear
- Beacon light, strobe
- Cab, deluxe (standard in Europe)
  - Camera, rearview integrated into advanced display
  - Electrically adjustable external heated mirrors (2)
  - Secondary display to enable features and adjust parameters
  - LED interior lighting
  - Sunscreen, front and rear
  - Touchscreen secondary display
  - Ride control adjustable speed activation
  - Preventative maintenance reminders
  - Integrated help function (26 languages)
- Camera, roof mounted, front view with separate display
- Cold start package
  - Ether starting aid, block heater and additional batteries, 1,000 CCA (4 total)
- Counterweight, additional options
- Coupler, (Fusion and ISO 23727)
- Debris packages (low, medium, high)
- Fenders (extended cover and full coverage)
- Guarding packages
- Linkage, high lift
- Lights, auxiliary, halogen or LED with engine and DEF compartment lights
- Payload Technology
  - Cat Production Measurement (CPM)
  - CPM Printer
- Product Link ELITE with capabilities for software push, data logging, histogram and trend mapping
- Radio packages
- Rear Object Detection
- Ride Control System, adjustable through secondary display
- Seats
  - Deluxe seat – fully adjustable fabric air suspension seat with mid seat backrest
  - Premium seat – fully adjustable leather and fabric air suspension with high backrest and air lumbar support. Seat is heated and ventilated on bottom cushion and backrest.
- Steering
  - Dual mode and secondary
- Tire Pressure Monitoring (TPM)

Notes

Notes

Notes

For more complete information on Cat products, dealer services, and industry solutions, visit us on the web at **www.cat.com**

© 2020 Caterpillar
All rights reserved

Materials and specifications are subject to change without notice. Featured machines in photos may include additional equipment. See your Cat dealer for available options.

CAT, CATERPILLAR, LET'S DO THE WORK, their respective logos, "Caterpillar Corporate Yellow," the "Power Edge" and Cat "Modern Hex" trade dress as well as corporate and product identity used herein, are trademarks of Caterpillar and may not be used without permission.

VisionLink is a trademark of Trimble Navigation Limited, registered in the United States and in other countries.

AEHQ7638-02 (11-2020)
Replaces AEHQ7638-01
(Europe)