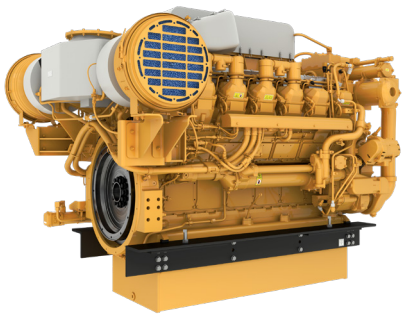

Image shown may not reflect actual configuration

Cat® 3512C

Marine Propulsion Engine

Commercial Applications

The Cat® 3512C commercial propulsion engine is built for demanding marine applications where reliability, fuel efficiency, and emissions compliance are essential. Featuring a proven V-12 platform, advanced electronic controls, and a wide range of ratings the 3512C delivers dependable performance across a variety of workboat operations.

Features and Benefits:

ENGINE DESIGN

- Electronic control minimizes fuel consumption and monitors engine operation
- Dual ECMs provide redundant control to enable seamless operation helping to avoid single point failure
- Instrument panel with cold mode start strategy and programmable low idle
- Mandatory control panel and optional MCS compliant alarm & protection system
- Electronic controllers are MCS (IACS E10) and cyber security (IEC 62443 - Level 1) compliant
- Advanced combustion design combines optimized cylinder geometry, precise nozzle configuration and electronic fuel injection control. to promote efficient fuel delivery and reliable power generation, helping maximize performance across a wide range of operating conditions

FLEXIBLE FIT

- Broad power range with standard and reverse rotation for easy vessel integration and repowers. Options available to match your workboat configuration.

PROVEN MARINE POWER

- Robust V 12, 4-stroke diesel built for continuous-duty workboats and sustained high-load propulsion. Multiple ratings and speeds match duty cycles, helping to deliver reliable performance and uptime in demanding marine conditions.

SIMPLIFIED CONFIGURATIONS

- Widely supported sizes and configurations simplify integration across workboat platforms. Many updated electronics meet IACS UR E26/E27 cyber requirements to support secure, compliant operation.

Specifications

Configuration	V 12, 4 -Stroke-Cycle Diesel	**Bore x Stroke**	Standard: 170 mm x 190 mm / 6.69 in x 7.48 in High Displacement: 170 mm x 215 mm / 6.69 in x 8.46 in
Emissions	IMO II, China II	**Refill Capacity Lube Oil System w/ Oil Filter Change**	152 L (40 gal) / 318 L (84 gal) / 625 L (165 gal)
Rated Engine Speed	1200 / 1600 / 1800 rpm		
Displacement	Standard: 51.8 L (3161 in^3) High Displacement: 58.6 L (3574 in^3)		
Aspiration	Twin Turbocharged-Aftercooled	**Oil Change Interval**	250 / 500 / 1000 hours
Governor	Electronic (ADEM4, ADEM6)	**Rotation (from flywheel end)**	Clockwise or Counterclockwise
Flywheel Housing	SAE No. 00	**Cooling**	Heat Exchanger or Keel Cooled

Ratings and Fuel Consumption

Commercial Propulsion Engines

Rating	mhp	bhp	bkW	rpm	U.S. g/h	g/bkWh	IMO	U.S. EPA	EU	China
A	1317	1300	969	1200	62.2	206.6	II	NC	NC	NC
A[1]	1521	1500	1119	1200	69.2	199.1	II	NC	NC	NC
A	1298	1281	955	1600	59.4	200.1	II	NC	NC	NC
A	1419	1400	1044	1600	64.5	198.7	II	NC	NC	NC
A[1]	1698	1675	1249	1600	77.2	198.7	II	NC	NC	NC
A[1]	1835	1810	1350	1600	82.1	195.7	II	NC	NC	NC
A	1521	1500	1119	1800	68.2	196.3	II	NC	NC	NC
B	1419	1400	1044	1200	66.9	206.1	II	NC	NC	NC
B[1]	1622	1600	1193	1200	73.7	198.9	II	NC	NC	NC
B	1379	1360	1014	1600	62.7	199.1	II	NC	NC	NC
B	1521	1500	1119	1600	68.8	198.0	II	NC	NC	NC
B[1]	1774	1750	1305	1600	79.9	196.9	II	NC	NC	NC
B[1]	1937	1911	1425	1600	86.2	194.7	II	NC	NC	NC
B	1596	1575	1174	1800	71.6	196.0	II	NC	NC	NC
B[1]	2281	2250	1678	1800	110.6	212.1	II	NC	NC	NC
C	1521	1500	1119	1200	71.7	206.3	II	NC	NC	NC
C[1]	1723	1700	1267	1200	78.9	200.1	II	NC	NC	NC
C	1429	1409	1051	1600	64.9	198.6	II	NC	NC	NC
C	1622	1600	1193	1600	73.4	197.8	II	NC	NC	NC
C[1]	1875	1850	1379	1600	83.7	195.2	II	NC	NC	NC
C[1]	2039	2012	1500	1600	90.7	194.6	II	NC	NC	NC
C	1672	1650	1230	1800	74.9	195.7	II	NC	NC	NC
C[1]	2400	2365	1765	1800	115.8	211.1	II	NC	NC	NC
D[1]	2587	2551	1903	1800	124.6	210.9	II	NC	NC	NC
A[1]	1835	1810	1350	1600	90.6	204.5	NC	NC	NC	C-II*
B[1]	1937	1911	1425	1600	90.6	204.5	NC	NC	NC	C-II*
B[1]	2281	2250	1678	1800	117.0	213.2	NC	NC	NC	C-II*
C[1]	1672	1649	1230	1600	78.3	204.8	NC	NC	NC	C-II*
C[1]	1672	1649	1230	1800	80.4	210.2	NC	NC	NC	C-II*
C[1]	2239	2367	1765	1800	117.0	213.2	NC	NC	NC	C-II*

*[1] High displacement engine (HD) * China Stage II ratings are only available as Counterclockwise rotation.*

Rating Definition:

A Rating (Unrestricted Continuous)

Typical applications: For vessels operating at rated load and rated speed up to 100% of the time without interruption or load cycling (80% to 100% load factor).

Typical operation ranges from 5000 to 8000 hours per year.

B Rating (Heavy Duty)

Typical applications: For vessels operating at rated load and rated speed up to 80% of the time with some load cycling (40% to 80% load factor).

Typical operation ranges from 3000 to 5000 hours per year.

C Rating (Maximum Continuous)

Typical applications: For vessels operating at rated load and rated speed up to 50% of the time with cyclical load and speed (20% to 80% load factor).

Typical operation ranges from 2000 to 4000 hours per year.

D Rating (Intermittent Duty)

Typical applications: For vessels operating at rated load and rated speed up to 16% of the time (up to 50% load factor).

Typical operating ranges from 1000 to 3000 hours per year.

3512C Marine Propulsion Engine

Dimensions

All dimensions are approximate.

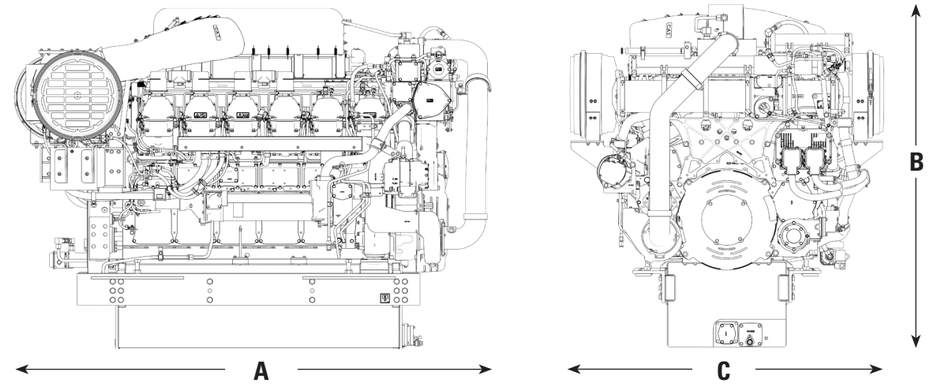

A	Length (Approx)	2590 mm	102.0 in	C	Width (Approx)	2037 mm	80.2 in
B	Height (Approx)	1904 mm	75.0 in		Dry Weight (Approx)	8104 kg	17866 lb

Note: Do not use for installation design. See general dimension drawings for detail. Weights and dimensions are approximations.

Standard and Optional Equipment

Standard Equipment

- Dual engine control modules
- Corrosion-resistant aftercooler core
- Dual turbochargers with water-cooled bearings and heat shields
- Centrifugal auxiliary water pump
- Electronically controlled unit injectors
- Vibration damper and guard
- Gear-driven centrifugal jacket water pump
- Oil filter, oil level gauge, and oil pump
- CW or CCW Rotation, LH or RH Service

Optional Equipment

- Plate-type heat exchanger
- Special appearance package with chrome cover available
- Marine Society certifications
- Power takeoff
- Shutoff and alarm contactors
- SOLAS compliant fuel connections with spill shield
- LECP-I, LECP II and LECP III instrument panel options
- Mounting rails
- Seawater pump
- See Marine price list for additional attachments

For more complete information on Cat products, dealer services, and industry solutions, visit us on the web at **www.cat.com**

© 2026 Caterpillar
All rights reserved

LEHM22783-01 (08-2026)
Replaces LEHM22783-00
(Global)

Materials and specifications are subject to change without notice. Featured machines in photos may include additional equipment. See your Cat dealer for available options.

CAT, CATERPILLAR, LET'S DO THE WORK, VisionLink™, their respective logos, "Caterpillar Corporate Yellow," the "Power Edge" and Cat "Modern Hex" trade dress as well as corporate and product identity used herein, are trademarks of Caterpillar and may not be used without permission.