# 3512E Marine Propulsion Engines

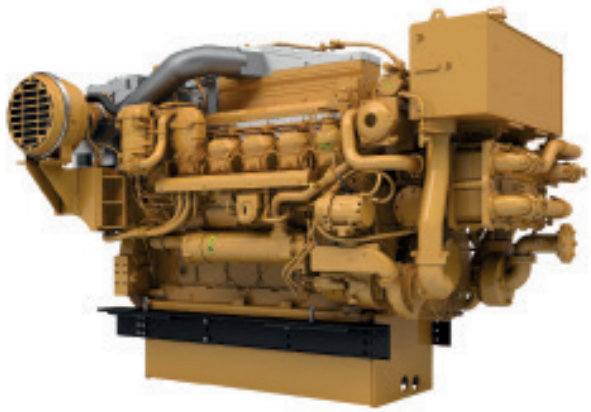

## ENGINE SPECIFICATIONS

| | |
|---|---|
| **CONFIGURATION** | V 12, 4-Stroke Cycle Diesel |
| **EMISSIONS** | IMO II / III Switchable / EU Stage V / U.S. EPA Tier 4 |
| **RATED ENGINE SPEED** | 1600 / 1800 |
| **DISPLACEMENT** | 58.6 L / 3574 $in^3$ |
| **ASPIRATION** | Twin Turbocharged - Aftercooled |
| **GOVERNOR** | Electronic (ADEM5) |
| **FLYWHEEL HOUSING** | SAE No. 00 with SAE No. 00 Flywheel (183 teeth) |

| | |
|---|---|
| **BORE X STROKE** | 170 mm x 215 mm / 6.69 in x 8.46 in |
| **REFILL CAPACITY LUBE OIL SYSTEM W/OIL FILTER CHANGE** | 250 hour Shallow Sump: 155 L / 41 gal<br>500 hour Standard Sump: 311 L / 82 gal<br>1000 hour Deep Sump: 614 L / 162 gal |
| **OIL CHANGE INTERVAL** | 250 / 500 / 1000 hour |
| **ROTATION (FROM FLYWHEEL END)** | Clockwise or Counterclockwise |
| **COOLING** | SCAC (Separate Circuit Aftercooler Core) |

## KEY FEATURES & BENEFITS

- Utilizes SCR technology for IMO III, EU Stage V, and U.S. EPA Tier 4 certification
- Utilizes a closed loop air assisted DEF dosing strategy that contributes to efficient mixing and control, service life before replacement is extended, adapts to urea quality
- Enhanced control of fuel injection optimized through crank timing and ADEM5 ECM technology monitors engine operation and helps to minimize fuel consumption
- Strengthened cylinder heads and valves for durability and peak cylinder pressure capability, resulting in high engine duty cycle

# RATINGS & FUEL DATA

| Rating | mhp | bhp | bkW | rpm | Rotation | U.S. g/h | g/bkW-h | IMO | U.S. EPA | EU | China |
|---|---|---|---|---|---|---|---|---|---|---|---|
| A | 1360 | 1341 | 1000 | 1600 | CW / CCW | 60.4 | 194.2 | II/III | NC | NC | NC |
| A | 1523 | 1502 | 1120 | 1600 | CW / CCW | 66.9 | 192.2 | II/III | NC | NC | NC |
| A | 1523 | 1502 | 1120 | 1800 | CW / CCW | 70.3 | 202.0 | II/III | NC | NC | NC |
| A | 1598 | 1576 | 1175 | 1800 | CW / CCW | 73.2 | 200.5 | II/III | NC | NC | NC |
| A | 1672 | 1649 | 1230 | 1800 | CW / CCW | 76.3 | 199.5 | II/III | NC | NC | NC |
| A | 1724 | 1700 | 1268 | 1600 | CW / CCW | 75.3 | 191.1 | II/III | NC | NC | NC |
| A | 1835 | 1810 | 1350 | 1600 | CW / CCW | 80.2 | 191.2 | II/III | NC | NC | NC |
| A | 2029 | 2000 | 1492 | 1600 | CW / CCW | 90.5 | 195.2 | II/III | NC | NC | NC |
| A | 2281 | 2250 | 1678 | 1800 | CW / CCW | 104.9 | 201.2 | II/III | NC | NC | NC |
| B | 2141 | 2112 | 1575 | 1600 | CW / CCW | 93.8 | 191.6 | II/III | NC | NC | NC |
| B | 2408 | 2375 | 1771 | 1800 | CW / CCW | 110.9 | 201.4 | II/III | NC | NC | NC |
| C | 2243 | 2213 | 1650 | 1600 | CW / CCW | 98.3 | 191.8 | II/III | NC | NC | NC |
| C | 2586 | 2550 | 1902 | 1800 | CW / CCW | 118.3 | 200.3 | II/III | NC | NC | NC |
| A | 1360 | 1341 | 1000 | 1600 | CCW | 61.0 | 196.4 | III | T4 | NC | NC |
| A | 1523 | 1502 | 1120 | 1600 | CCW | 67.7 | 194.6 | III | T4 | NC | NC |
| A | 1523 | 1502 | 1120 | 1800 | CCW | 71.0 | 204.1 | III | T4 | NC | NC |
| A | 1598 | 1576 | 1175 | 1800 | CCW | 73.9 | 202.4 | III | T4 | NC | NC |
| A | 1672 | 1649 | 1230 | 1800 | CCW | 77.0 | 201.5 | III | T4 | NC | NC |
| A | 1724 | 1700 | 1268 | 1600 | CCW | 76.3 | 193.7 | III | T4 | NC | NC |
| A | 1835 | 1810 | 1350 | 1600 | CCW | 81.3 | 193.9 | III | T4 | NC | NC |
| A | 2027 | 2000 | 1491 | 1600 | CCW | 90.1 | 194.4 | III | T4 | NC | NC |
| A | 2281 | 2250 | 1678 | 1800 | CCW | 104.9 | 201.2 | III | T4 | NC | NC |
| B | 2141 | 2112 | 1575 | 1600 | CCW | 95.4 | 194.8 | III | T4 | NC | NC |
| B | 2408 | 2375 | 1771 | 1800 | CCW | 110.9 | 201.5 | III | T4 | NC | NC |
| C | 2243 | 2213 | 1650 | 1600 | CCW | 100.1 | 195.2 | III | T4 | NC | NC |
| C | 2585 | 2550 | 1901 | 1800 | CCW | 118.3 | 200.3 | III | T4 | NC | NC |
| A | 1360 | 1341 | 1000 | 1600 | CW / CCW | 61.9 | 199.1 | NC | NC | EU-V | NC |
| A | 1523 | 1502 | 1120 | 1600 | CW / CCW | 68.6 | 197.0 | NC | NC | EU-V | NC |
| A | 1724 | 1700 | 1268 | 1600 | CW / CCW | 77.0 | 195.5 | NC | NC | EU-V | NC |
| B | 1835 | 1810 | 1350 | 1600 | CW / CCW | 82.2 | 195.9 | NC | NC | EU-V | NC |

BSFC (g/bkW-h) and VFC (U.S. g/h) are provided at rated RPM & Power.

## STANDARD EQUIPMENT

- Corrosion-resistant aftercooler core
- Dual ADEM5 engine control modules with electronic unit injection and low pressure fuel system
- Dual water-cooled turbochargers
- Vibration damper and guard
- Meets SOLAS regulations
- Duplex fuel and oil filtration
- Auxiliary fresh water pump
- Gear driven centrifugal jacket water pump with enhanced capacity

## OPTIONAL ATTACHMENT

- Plate-type heat exchanger with integrated SCAC and Jacket Water expansion tanks
- Special appearance packages with chrome covers
- Marine society certifications
- Power take-off
- Certified marine alarm and protection safety system
- Standard instrument panel with color touchscreen display
- Mounting rails and trunnion mount options
- Engine mounted fuel cooler (SCAC water cooled)
- Sea water pump with 25% added capacity for cooling auxiliary vessel equipment
- Closed crank case ventilation

# CLEAN EMISSIONS MODULE (CEM)

**Dimensions and Weight**

| Model | Length (1) | Height (2) | Width (3) | Weight |
|---|---|---|---|---|
| 12 Brick Z-Flow | 3453.6 mm<br>135.97 in | 1012.4 mm<br>39.86 in | 1627.2 mm<br>64.06 in | 1253.6 kg<br>2763.7 lb |
| 12 Brick U-Flow | 2712.0 mm<br>106.77 in | 1012.4 mm<br>39.86 in | 1627.2 mm<br>64.06 in | 1261.5 kg<br>2783.3 lb |
| Dosing Cabinet | 948.6 mm<br>37.35 in | 534.5 mm<br>21.05 in | 477.3 mm<br>18.79 in | --- |

**Clean Emissions Module (CEM)**
Available in U-flow configurations (shown) and Z-flow configurations.

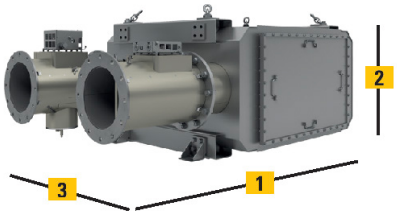


The 3512E engine requires Selective Catalyst Reduction (SCR) technology.

The easy-to-install Cat® SCR System is an exhaust gas aftertreatment solution certified to be U.S. EPA Tier 4 / EU Stage V / IMO III emission standards.

- IMO II-III switchable calibrations available
- Maintains engine efficiency, durability and reliability
- Easy to install with minimum impact to vessel design
- Compact package from one single source
- Available for new builds and retrofits
- For detailed dimensions and installation requirements, please refer to latest revision of A&I guide LEBM0023.

**Dosing Cabinet**

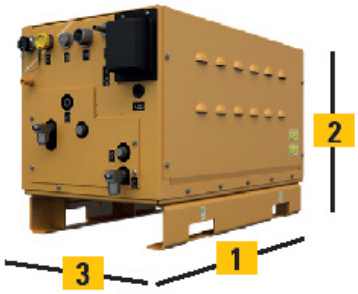

## Rating Definitions and Conditions:

**A Rating (Unrestricted Continuous)**

Typical Applications: For Vessels operating at rated load and rated speed up to 100% of the time without interruption or load cycling (80% to 100% load factor).

Typical operation ranges from 5000 to 8000 hours per year.

**B Rating (Heavy Duty)**

Typical applications: For vessels operating at rated load and rated speed up to 80% of the time with some load cycling (40% to 80% load factor).

Typical operation ranges from 3000 to 5000 hours per year.

**C Rating (Maximum Continuous)**

Typical applications: For vessels operating at rated load and rated speed up to 50% of the time with cyclical load and speed (20% to 80% load factor).

Typical operation ranges from 2000 to 4000 hours per year.

# ENGINE DIMENSIONS & WEIGHT

| | |
|---|---|
| **LENGTH** | Max: 125.4 in. / 3184.1 mm<br>Min: 123.5 in. / 3136.1 mm |
| **HEIGHT** | Max: 92.1 in. / 2340.3 mm<br>Min: 91.9 in. / 2334.6 mm |
| **WIDTH** | Max: 81.9 in. / 2080.1 mm<br>Min: 80.2 in. / 2036.7 mm |
| **DRY WEIGHT** | Max: 12824.3 lb / 5817 kg<br>Min: 12606.0 lb / 5718 kg |

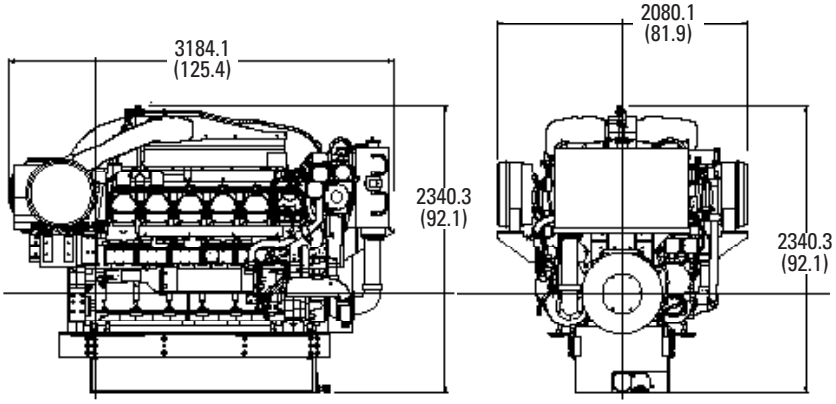




© 2025 Caterpillar. All Rights Reserved. CAT, CATERPILLAR, LET'S DO THE WORK, their respective logos, "Caterpillar Corporate Yellow", the "Power Edge" and Cat "Modern Hex" trade dress as well as corporate and product identity used herein, are trademarks of Caterpillar and may not be used without permission.