C18 Marine Auxiliary Genset
Commercial Applications

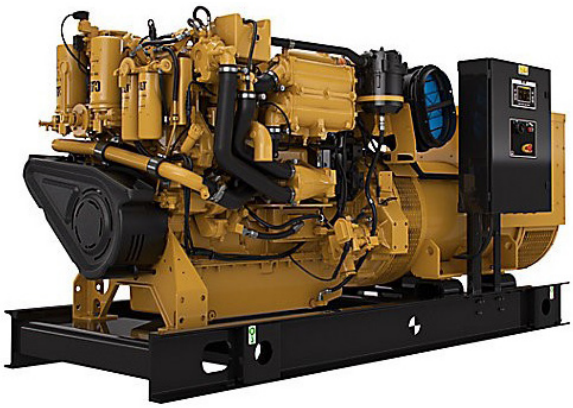

ENGINE SPECIFICATIONS

CONFIGURATION	Inline 6, 4-Stroke Diesel
EMISSIONS	IMO II, U.S. EPA Tier 3, China Stage II, EU Stage V
RATED ENGINE SPEED	1500 / 1800 / 2100 rpm
DISPLACEMENT	18.1 L (1106 cu in)
ASPIRATION	Turbocharged – Aftercooled
GOVERNOR	Electronic
FLYWHEEL HOUSING	SAE No. 0 (136 teeth)

BORE X STROKE	145 mm (5.7 in) x 183 mm (7.2 in)
REFILL CAPACITY LUBE OIL SYSTEM W/OIL FILTER CHANGE	68 L (18 gal) Deep Pan
OIL CHANGE INTERVAL	250 / 500 hours
ROTATION (FROM FLYWHEEL END)	Counterclockwise
COOLING	Heat Exchanger, Keel, or Radiator Cooled

KEY FEATURES & BENEFITS

- Electronic control system provides rapid torque and throttle response at low speeds, while maintaining fuel efficiency at high speeds
- Compatible with all Cat® displays for seamless vessel integration
- Load sharing compatible
- Available remote-mounted display panel with start, stop, and engine diagnostics
- Wide range of available Marine Society certifications

STANDARD EQUIPMENT

- Separate circuit aftercooler (SCAC)
- Heat exchanger, keel, or radiator cooling
- Engine mounted SCAC and Jacket Water shunt tanks
- Watercooled exhaust manifold and turbocharger
- Center sump oil pan
- Oil and Fuel Filter service located on the front of the engine
- MEUI fuel system
- Adjustable front mounting supports
- Electronic controls
- Front vibration damper and guard

OPTIONAL ATTACHMENTS

- Alternators – 24 V 75 or 105 A
- Closed crankcase ventilation
- Control Panels
- Load sharing
- Marine Classed Alarm and Protection
- Single Electric (24 V), Single Air, or combined air/electric dual starting
- Fuel Cooler
- PTO Drives – V-belt pulleys and stub shaft
- Duplex fuel and oil filters
- Jacket water heaters 120/240 V

RATINGS & FUEL CONSUMPTION

GENERATOR SETS

ekW@.8pf	kVA	Hz	RPM	U.S. g/H	g/bkW-h	IMO	U.S. EPA	EU	China
280	350	50	1500	19.4	205.9	II	NC	NC	NC
360	450	50	1500	24.5	205.4	II/III	NC	EU V[1]	NC
410	513	50	1500	27.9	204.5	II/III	NC	NC	NC
425	531	50	1500	28.2	197.3	III	NC	EU V[1]	NC
465	581	50	1500	31.4	205.4	II/III	NC	NC	C-II
345	431	60	1800	24.7	213.3	II	NC	NC	C-II
430	538	60	1800	30.6	211.3	II/III	T3C	EU V[1]	C-II
545	681	60	1800	37.4	210.7	NC	T3C	NC	NC
565	706	60	1800	39.9	214.1	II/III	NC	EU V[1]	C-II
260R	325	50	1500	19.4	205.9	II	NC	NC	NC
335R	419	50	1500	24.5	205.4	II/III	NC	NC	NC
390R	486	50	1500	27.9	204.5	II	NC	NC	C-II
445R	556	50	1500	31.4	205.4	II/III	NC	NC	C-II
310R	388	60	1800	24.7	213.3	II	NC	NC	C-II
395R	494	60	1800	30.6	211.3	II	T3C	NC	C-II
510R	637	60	1800	37.4	210.7	NC	T3C	NC	NC
530R	663	60	1800	39.9	214.1	II/III	NC	NC	C-II

IMO III and EU Stage V require exhaust aftertreatment

Rating Definition Generator Sets and Auxiliary Engines:

All Cat Marine auxiliary engines and generator sets are rated for prime power for continuous electric service according to ISO 8528-1.
Hours per year: unlimited
Load Factor: < 70%
Overload Capacity: + 10% (Maximum of 1 hour 12, maximum of 25 hours per year.

ENGINE DIMENSIONS & WEIGHT

LENGTH (APPROX.)	119.7 in / 3040 mm
HEIGHT (APPROX.)	66.3 in / 1684 mm
WIDTH (APPROX.)	60.9 in / 1547 mm
DRY WEIGHT (APPROX.)	8733 - 9974 lb / 3951 - 4524 kg

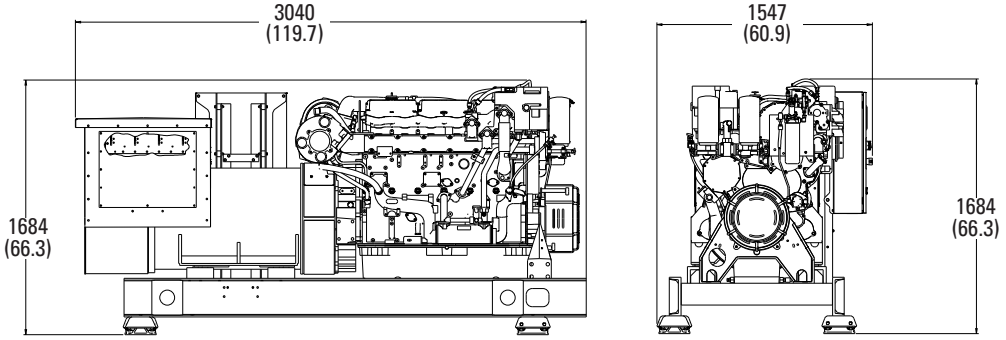

LEHM23038-00
© 2025 Caterpillar. All Rights Reserved. CAT, CATERPILLAR, LET'S DO THE WORK, their respective logos, "Caterpillar Corporate Yellow", the "Power Edge" and Cat "Modern Hex" trade dress as well as corporate and product identity used herein, are trademarks of Caterpillar and may not be used without permission.